Submersible Slurry Pumps

Model SPL

Discharge : 3 inch to 8 inch (80mm to 200mm)
Motor Capacity : 1.5 kW to 110 kW

A heavy duty high chrome wet end design provides with long life in slurry and other abrasive application.

Applications:

- Mining
- Mineral processing
- Aggregate
- Iron and steel production
- Power generation
- Other abrasive applications

ISO 9001 Certificate

LLOYD'S REGISTER QUALITY ASSURANCE · ISO9001 · UKAS MANAGEMENT SYSTEMS 001

EIM ELECTRIC CO.,LTD.

GENERAL DESCRIPTION

	Description	Options
Pump	Free Standing Models	Guide Rail System
Discharge Diameter	3", 4", 6", and 8" (80,100,150 and 200mm)	
Pumpage	Mixture of liquid and solids such as mill scale, dust coal, cement dust, lime, sand, mud, gravel.	
Max. Solids Size	3.0 inch sphere (75mm)	
Max. Submergence	65 FT (20m)	
Liquid Temperature	14° F to 104° F (-10℃ to 40℃)	
Materials		
Impeller/Pump Casing /Suction Cover	High-Chrome Cast Iron	
Hardware	304 Stainless Steel	
Motor		
Configuration	Flange mounted, vertical air-filled submersible induction motor	
Synchronous Speed	1800RPM (60Hz)/ 1500RPM (50Hz)	
Insulation Class	H	
Voltages / Phase / Hertz	200, 380, 400V/ 3 phase/ 50Hz* 220, 380, 440V/ 3 phase/ 60Hz	Special voltages in the range of 200-600 Volts
Thermal Protection Device	up to 10 HP (7.5kW) : Bimetallic over current switch 15 HP (11kW) and above : Two normally closed thermostats embedded in windings	
Cable Length	25 FT (8m)	Extra length cable
Materials		
Motor Housing	Cast Iron	
Motor Shaft	403 Stainless Steel	
Shaft Seals	Double shaft seals [Outer seal] Silicon Carbide faces (both rotating and stationary faces) [Inner seal] up to 40 HP (30kW) : Carbon against Ceramic faces 50 HP (37kW) and above : Silicon Carbide faces (both rotating and stationary faces)	Silicon Carbide faces (both rotating and stationary faces) inner and outer seals and *VITON® seal elastomers
Bearings	[Main (lower)] up to 5 HP (3.7kW) : Deep groove ball bearings 7.5 HP (5.5kW) and above : Double row angular contact ball bearing [Support (upper)] up to 40 HP (30kW) : Deep groove ball bearing 50 HP (37kW) and above : Roller bearing	
O-Rings	Nitrile Butadiene Rubber (NBR)	VITON® O-Rings

*50Hz is not available for SPL-2075ED, SPL-20100ED, SPL-20125ED, SPL-20150ED

*VITON® is a DuPont's product name. Fluorine rubber, Corrosion-resistant, Heat -resistant

FEATURES

① MOTOR

An air-filled, induction motor with specially treated class H nonhygroscopic insulation is used as standard. The Motor housing of heavy duty cast iron is sealed using O-rings.

② SHAFT

The high quality, one-piece, oversized shaft made of 403 stainless steel is designed so as to lengthen bearing and seal life reducing shaft deflection and vibration.

③ BEARINGS

Specially adapted for vertical assembly. Special high temperature grease is used for lubrication of both the upper and lower bearings. An efficient bearing cooling system is used to lengthen the lives of both the bearings and grease.

④ SHAFT SEAL

Double mechanical seals prevent the water from penetrating into the oil chamber and the motor housing. The inner seal (motor side) uses carbon against ceramic faces (up to 30kW) or dual silicon carbide faces (37kW and over). The outer seal (process side) uses dual silicon carbide faces for all models.

⑤ IMPELLER

The impeller has a large through let allowing passage of large particles. And thus risk of clogging.
Made of abrasion resistant high chrome

⑥ OIL CHAMBER

Oil in the oil chamber lubricates and cools the shaft seals and functions as a buffer to prevent water penetration into the motor.

⑦ PUMP CASING

Owing to the specially designed pump casing with large opening at motor side, motor unit and wet end are easily separated for fast access to impeller and shaft seals. This results in true savings, greatly reducing maintenance and downtime costs. Made of abrasion resistant high chrome iron.

⑧ THERMAL PROTECTOR

To protect over heating, bimetallic over current switch is built in the motor housing cover (up to 7.5kW) or two normally closed thermostats are embedded in the motor windings (11kW and above).

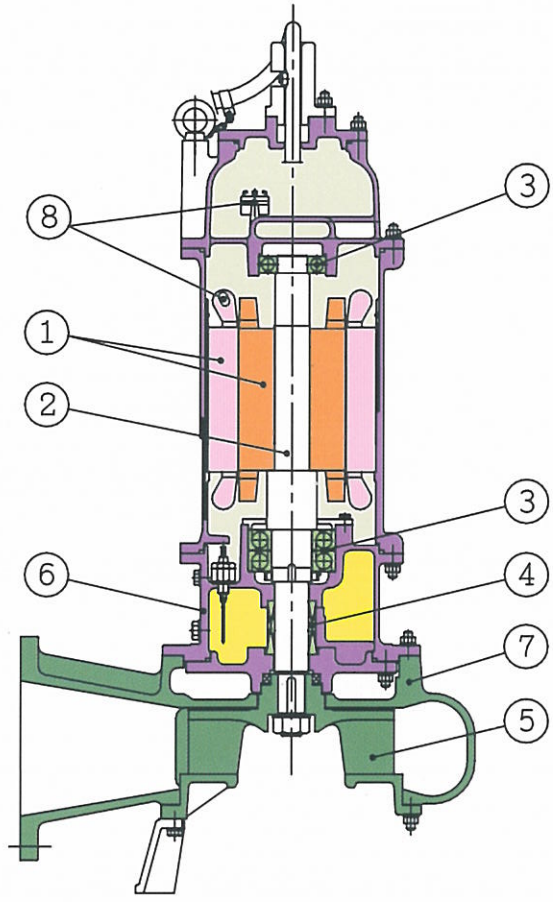

: Made of abrasion resistant high chrome iron

SPECIFICATIONS

MODEL	Discharge inch (mm)	BHP		Rating				Max. Solid ϕ inch (mm)	W't lb (kg)
		kW	HP	Capacity		Head			
				m^3/min	(l/sec)	m	(ft)		
SPL-82E	3 (80)	1.5	2	0.55	(9.2)	8	(26.3)	0.8 (20)	150 (68)
SPL-83E		2.2	3	0.6	(10)	10	(32.8)	0.9 (22)	155 (70)
SPL-85E		3.7	5	1.0	(16.7)	10	(32.8)	1.2 (29)	190 (86)
SPL-88E		5.5	7.5	0.6	(10)	20	(65.6)	1.2 (29)	350 (159)
SPL-810E		7.5	10	0.6	(10)	25	(82)	1.2 (29)	390 (177)
SPL-815ED		11	15	1.0	(16.7)	25	(82)	1.2 (29)	410 (186)
SPL-820ED		15	20	1.2	(20)	30	(98.4)	1.2 (29)	570 (258)
SPL-108E	4 (100)	5.5	7.5	1.5	(25)	10	(32.8)	1.4 (34)	330 (150)
SPL-1010E		7.5	10	1.5	(25)	15	(49.2)	1.4 (34)	370 (168)
SPL-158E	6 (150)	5.5	7.5	2.0	(33.3)	6	(19.7)	2.2 (55)	400 (182)
SPL-1510E		7.5	10	2.5	(41.7)	10	(32.8)	2.4 (60)	430 (195)
SPL-1515ED		11	15	2.5	(41.7)	15	(49.2)	1.8 (44)	480 (218)
SPL-1520ED		15	20	3.0	(50)	15	(49.2)	1.8 (44)	640 (290)
SPL-1530ED		22	30	3.0	(50)	20	(65.6)	1.4 (34)	980 (445)
SPL-2015ED	8 (200)	11	15	4.0	(66.7)	10	(32.8)	2.4 (60)	550 (250)
SPL-2020ED		15	20	5.0	(83.3)	10	(32.8)	2.4 (60)	870 (395)
SPL-2030ED		22	30	5.0	(83.3)	15	(49.2)	2.6 (65)	910 (412)
SPL-2040ED		30	40	3.5	(58.3)	26	(85.3)	1.8 (44)	1,370 (622)
SPL-2050ED		37	50	5.0	(83.3)	22	(72.2)	2.2 (55)	1,410 (640)
SPL-2060ED		45	60	5.0	(83.3)	30	(98.4)	2.2 (55)	1,480 (672)
SPL-2075ED		55	75	6.0	(100)	33	(108.2)	3.0 (75)	1,670 (758)
SPL-20100ED		75	100	6.0	(100)	45	(147.6)	3.0 (75)	2,000 (908)
SPL-20125ED		90	125	6.0	(100)	53	(173.8)	3.0 (75)	2,210 (1002)
SPL-20150ED		110	150	6.0	(100)	60	(196.8)	3.0 (75)	2,360 (1070)

PERFORMANCE CURVES

SPL-82E to -1010E (50Hz/60Hz)

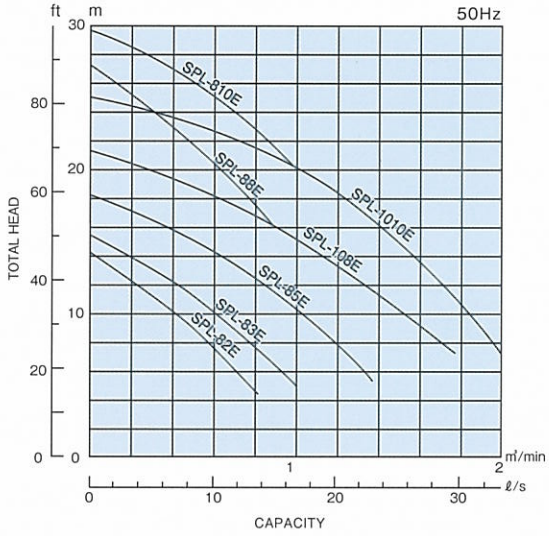

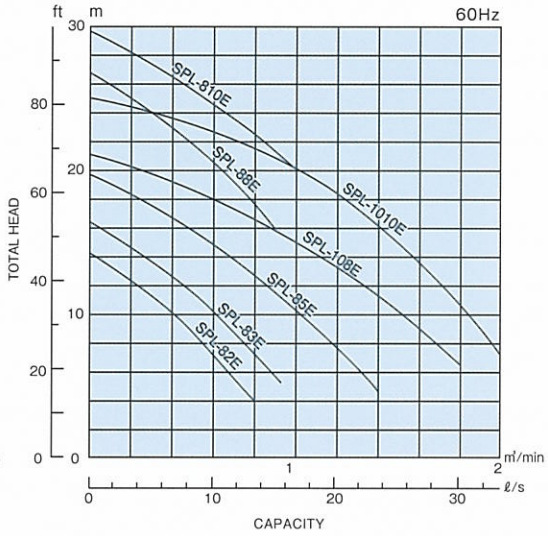

SPL-158E to -2030ED (50Hz/60Hz)

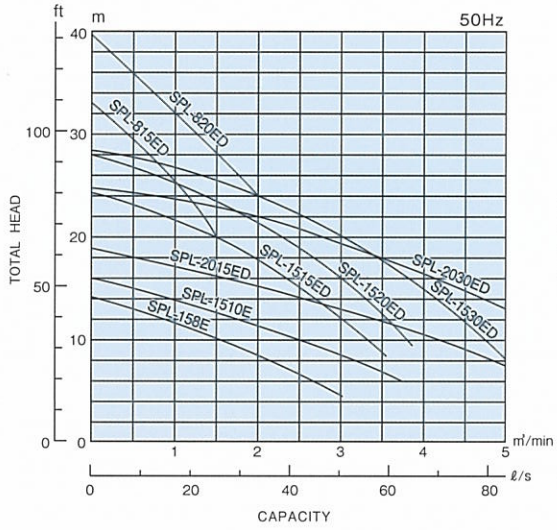

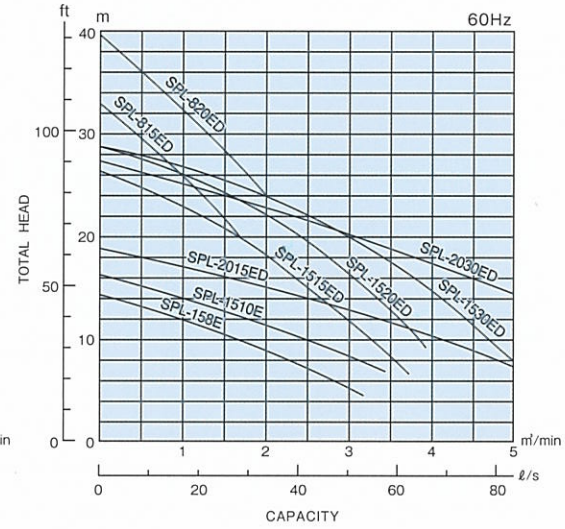

SPL-2020ED to -2060ED (50Hz)

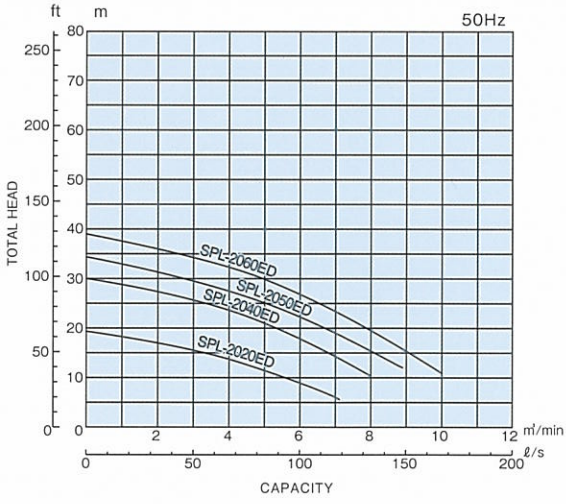

SPL-2020ED to -20150ED (60Hz)

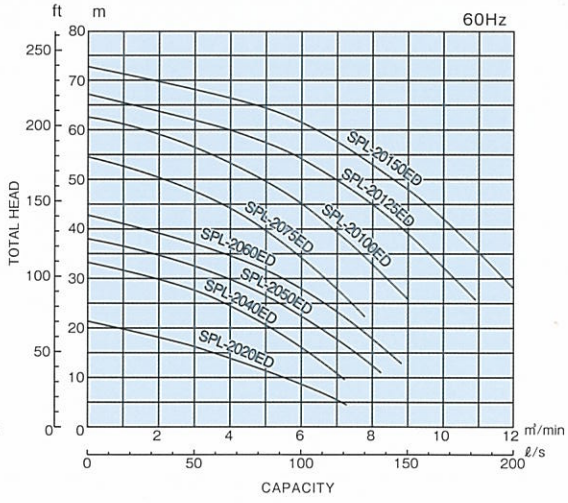

DIMENSIONS : Model SPL, Free-Standing Type

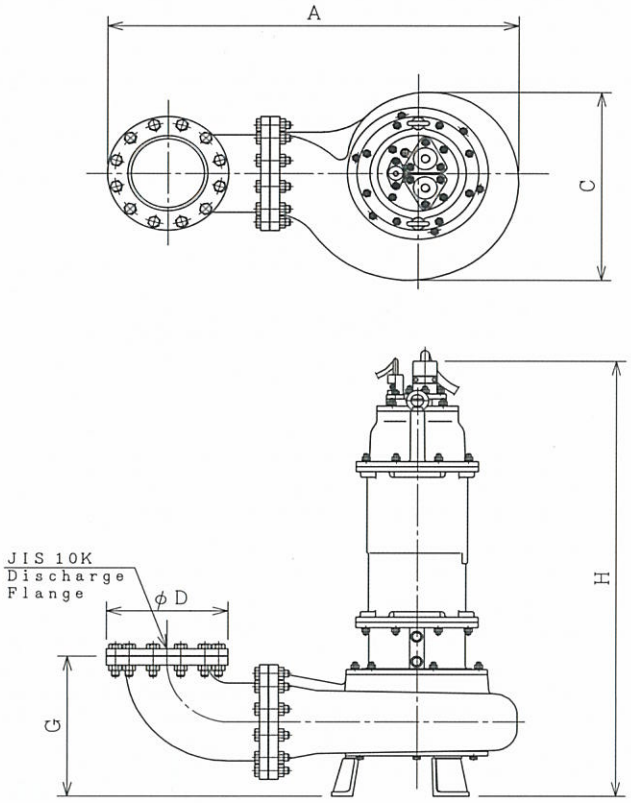

Table of Dimensions

Model	Disch.	A		C		D		G		H	
	in(mm)	in	mm	in	mm	in	mm	in	mm	in	mm
SPL-82E		21.9	555	11.9	300	7.3	185	9.1	230	24.5	620
SPL-83E		22.2	563	12.5	315	7.3	185	9.1	230	24.7	625
SPL-85E	3	24.1	610	14.3	363	7.3	185	9.1	230	24.5	620
SPL-88E		30.6	777	16.7	423	7.3	185	11.5	290	32.1	814
SPL-810E	(80)	30.6	777	16.7	423	7.3	185	11.5	290	35.9	910
SPL-815ED		31.4	797	18.4	466	7.3	185	11.5	290	37.1	942
SPL-820ED		31.4	797	18.4	466	7.3	185	11.5	290	47	1193
SPL-108E	4	28.6	725	17	430	8.3	210	12.3	312	32.6	827
SPL-1010E	(100)	28.6	725	17	430	8.3	210	12.3	312	36.3	922
SPL-158E		36.2	917	18.1	458	11.1	280	16.4	416	33.8	858
SPL-1510E	6	36.2	917	18.1	458	11.1	280	16.4	416	37.6	953
SPL-1515ED		38.6	980	19.8	501	11.1	280	16.5	417	38.4	974
SPL-1520ED	(150)	38.6	980	19.8	501	11.1	280	16.5	417	48.3	1225
SPL-1530ED		42.8	1085	24.5	620	11.1	280	18.2	460	50.1	1271
SPL-2015ED		40.5	1028	18.7	474	13	330	16.2	411	40.2	1020
SPL-2020ED		43.9	1115	21.6	548	13	330	16	404	49.5	1257
SPL-2030ED		43.9	1115	21.6	548	13	330	16	404	49.5	1257
SPL-2040ED		49.1	1245	27.4	695	13	330	18.9	480	59.3	1505
SPL-2050ED	8	49.1	1245	27.4	695	13	330	18.9	480	59.3	1505
SPL-2060ED		48.9	1240	27.6	700	13	330	18	455	52.2	1325
SPL-2075ED	(200)	50.4	1280	27.4	695	13	330	23.7	600	59.5	1510
SPL-20100ED		50.4	1280	27.4	695	13	330	23.7	600	59.5	1510
SPL-20125ED		50.4	1280	27.4	695	13	330	23.7	600	74.9	1900
SPL-20150ED		50.4	1280	27.4	695	13	330	23.7	600	74.9	1900

DIMENSIONS : Model SPL, Discharge Elbow Assembly Type

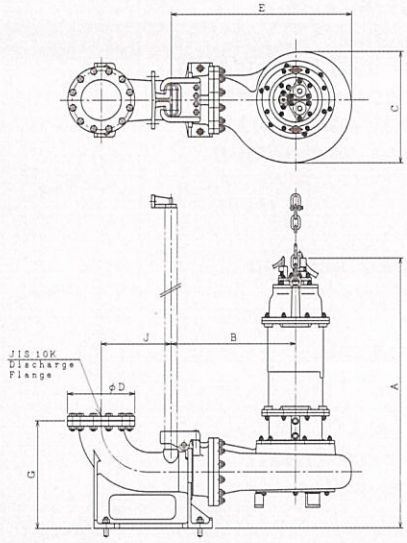

Table of Dimensions

Model	Disch.	A		B		C		D		E		G		J	
	in (mm)	in	mm	in	mm	in	mm	in	mm	in	mm	in	mm	in	mm
SPL-82E		26	660	13.5	342	11.9	300	7.3	185	19.5	493	10.7	270	8.3	209
SPL-83E		26.2	665	13.5	342	12.5	315	7.3	185	19.8	501	10.7	270	8.3	209
SPL-85E	3	26	660	14.7	372	14.3	363	7.3	185	21.7	549	10.7	270	8.3	209
SPL-88E		31.4	796	15.8	401	16.7	423	7.3	185	24.3	615	10.7	270	8.3	209
SPL-810E	(80)	35.2	892	15.8	401	16.7	423	7.3	185	24.3	615	10.7	270	8.3	209
SPL-815ED		36.3	921	15.8	401	18.4	470	7.3	185	25	635	10.7	270	8.3	209
SPL-820ED		46.2	1172	15.8	401	18.4	470	7.3	185	25	635	10.7	270	8.3	209
SPL-108E	4	32.9	835	15.7	397	17	430	8.3	210	24.1	611	12.8	325	9.4	239
SPL-1010E	(100)	36.7	930	15.7	397	17	430	8.3	210	24.1	611	12.8	325	9.4	339
SPL-158E		36.3	922	20.1	509	18.1	450	11.1	280	29	735	18.2	460	11.2	282
SPL-1510E	6	40.1	1017	20.1	509	18.1	450	11.1	280	29	735	18.2	460	11.2	282
SPL-1515ED		40.9	1037	21.7	549	19.8	501	11.1	280	31.5	798	18.2	460	11.2	282
SPL-1520ED	(150)	50.8	1288	21.7	549	19.8	501	11.1	280	31.5	798	18.2	460	11.2	282
SPL-1530ED		50.9	1291	21.8	551	24.5	600	11.1	280	33.6	853	18.2	460	11.2	282
SPL-2015ED		42.3	1074	22	559	18.7	474	13	330	31.4	796	20.7	525	13.5	342
SPL-2020ED		51.9	1318	24	609	21.6	548	13	330	34.9	885	20.7	525	13.5	342
SPL-2030ED		51.9	1318	24	609	21.6	548	13	330	34.9	885	20.7	525	13.5	342
SPL-2040ED		58.9	1495	26.4	669	25.2	640	13	330	39	990	20.7	525	13.5	342
SPL-2050ED	8	58.9	1495	26.4	669	25.2	640	13	330	39	990	20.7	525	13.5	342
SPL-2060ED		58.9	1495	26.4	669	25.2	640	13	330	39	990	20.7	525	13.5	342
SPL-2075ED	(200)	63.4	1610	26.4	669	25.2	640	13	330	39	990	20.7	525	13.5	342
SPL-20100ED		63.4	1610	26.4	669	25.2	640	13	330	39	990	20.7	525	13.5	342
SPL-20125ED		78.8	2000	26.4	669	25.2	640	13	330	39	990	20.7	525	13.5	342
SPL-20150ED		78.8	2000	26.4	669	25.2	640	13	330	39	990	20.7	525	13.5	342

SAFETY PRECAUTIONS

- Before operating our pumps, read the operation manual carefuly.
- All the pictures shown in this catalog have been taken after removing aii the safety devices legally required, to make the products easier to see.
- Pump and pump installations drawings are only for explanatory and descriptive purposes.

- The designs or specifications of the models in this catalog are subject to change without prior notice due to continual improvement.

EIM ELECTRIC CO.,LTD.

URL http://www.eimpump.co.jp

10-2-16, Inokuma, Mizumakimachi, Onga-Gun, Fukuoka, 807-0001 Japan
Phone : +81-93-202-4147 Telefax : +81-93-202-1288
E-mail:overseas@eimpump.co.jp

PCE-2019
Printed in Japan Sep. 2012 YA